SORMAT

S-CSA+ | S-CSA

CONCRETE SCREWS

MADE IN

S-CSA P	S-CSA I	S-CSA+ HEX	S-CSA CS	S-CSA HEX
SIZE 6	SIZE 6	SIZES 8 | 10 | 14	SIZES 5 | 6	SIZES 5 | 6

ETA-APPROVED, HEAVY-DUTY CONCRETE SCREWS FOR HIGH LOADS

NEW

S-CSA+

SORMAT CONCRETE SCREWS

ETA-approved S-CSA and S-CSA+ concrete screws are manufactured in Finland. They are easy and quick to install and do not require special tools or work methods. Concrete screws can withstand high loads even at relatively small mutual and edge distances. Concrete screws are removable and reusable and are also well suited for temporary fixings such as the installation of element and formwork supports.

Features

- Self tapping screw anchors for through installations.
- No expansion forces, so relatively small edge and mutual distances are possible.
- The concrete screw can be loaded immediately.
- It can be said that a concrete screw combines the benefits of undercut anchors and chemical anchors, but no special tools or curing time are required.

- ZP (electro zinc plated) is suitable for dry interiors.
- ML (Multi Layer) is a corrosion-resistant coating with properties similar to hot-dip galvanizing. Tested in salt spray test: according to DIN EN ISO 9227 (more than 1000h without the appearance of red rust)

- S-CSA+ HEX: hex drive with combined washer
- S-CSA 6 HEX: hex drive with combined washer + torx
- S-CSA I: internal thread M8 / M10
- S-CSA CS: countersunk
- S-CSA P: pan head
- S-CSA P (L): low pan head

Concrete screw benefits

- Efficient
- Cost effective
- Quick and easy installation
- Removable and reusable
- No expansion forces

S-CSA+ HEX

ETA-approved heavy-duty concrete screws for high loads

VERSIONS

- **S-CSA+ HEX**, Steel
  Zinc plated (ZN) or Multi Layer (ML)

BASE MATERIALS

- **Approved for:**
  Cracked concrete,
  Non-cracked concrete
- **Also suitable for:**
  Solid clay brick
  Solid sand-lime brick

APPROVALS

ETA OPTION 1

PRODUCT DESCRIPTION

- Self-tapping, approved screw anchor for push-through installations.
- Requires a small drill hole diameter. No prescribed tightening torque.
- No expansion forces allowing for small edge distances and spacings.
- Fully removable.
- ZP for dry indoor use.
- ML corrosion protection coating for outdoor use in not safety relevant Applikationer.

APPLICATIONS

- For installing mold supports
- Auxiliary structures for facades
- Temporary fastenings
- Pillars and base plates
- Shelving systems
- Rails, handrails and handrails
- Collars and sole pieces

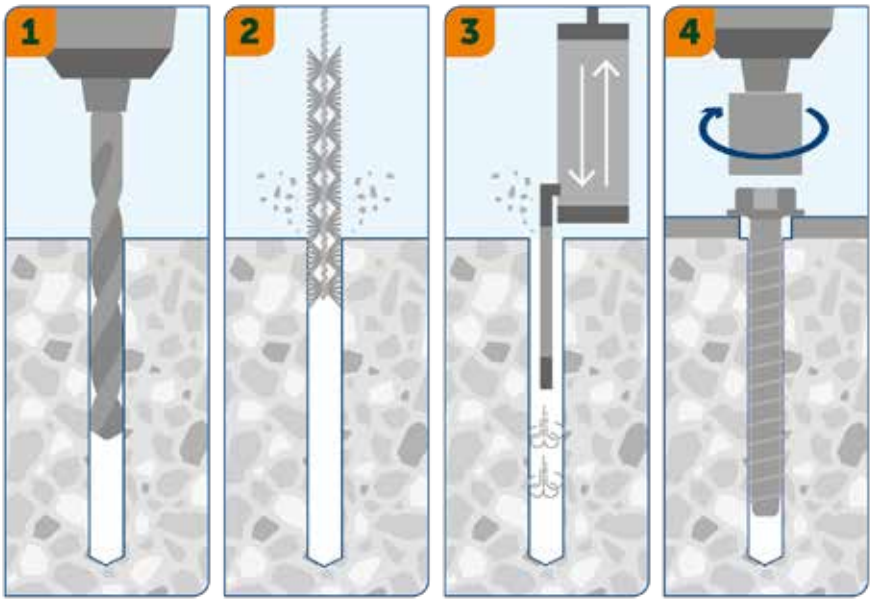

INSTALLATION

1. Drill a hole according to the product data.
2.-3. Clean the hole using a metal brush and a blow-out pump.
4. Install the screw manually using a wrench or with an impact screwdriver.

sormat.com

S-CSA HEX+, zinc plated / Multi Layer

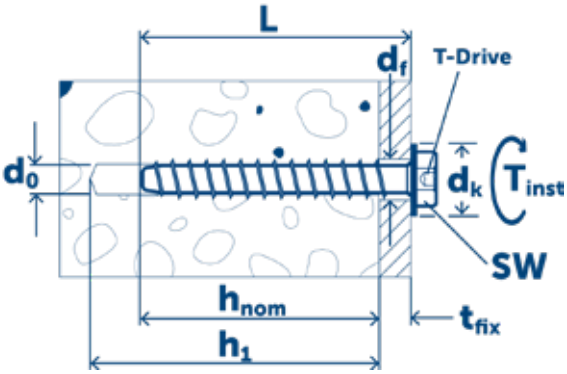

TECHNICAL DATA

Type	Code	Code	Approval	Length	ø	Min. hole depth	Max. fixture thickness	Head Ø	Width across flats		
	Zinc plated	Multi Layer	ETA	L mm	d_0 mm	h_1 mm	t_{fix} mm	d_k mm	SW mm		
8x55/5	9640071700	9640071701	•	55	8	60	5	17,5	13	50	250
8x70/5/20	9640071709	9640071710	•	70	8	75 / 60	5/20	17,5	13	50	250
8x80/15/30	9640071715	9640071716	•	80	8	75 / 60	15/30	17,5	13	50	250
8x90/25/40	9640071721	9640071722	•	90	8	75 / 60	25/40	17,5	13	50	250
8x100/35/50	9640071724	9640071725	•	100	8	75 / 60	35/50	17,5	13	50	250
8x120/55/70	9640071730	9640071731	•	120	8	75 / 60	55/70	17,5	13	25	125
8x140/75/90	9640071736	9640071737	•	140	8	75 / 60	75/90	17,5	13	25	125
10x60/5	9640071744	9640071745	•	60	10	65	5	20,5	15	25	125
10x70/5	9640071750	9640071751	•	70	10	65	15	20,5	15	25	125
10x80/25	9640071756	9640071757	•	80	10	65	25	20,5	15	25	125
10x90/5/35	9640071762	9640071763	•	90	10	95 / 65	5/35	20,5	15	25	125
10x100/15/45	9640071765	9640071766	•	100	10	95 / 65	15/45	20,5	15	25	125
10x120/35/65	9640071771	9640071772	•	120	10	95 / 65	35/65	20,5	15	25	125
10x140/55/85	9640071777	9640071778	•	140	10	95 / 65	55/85	20,5	15	25	125
10x160/75/105	9640071783	9640071784	•	160	10	95 / 65	75/105	20,5	15	25	125
14x75/10 SW21	9640071785	9640071787	•	75	14	75	10	28	21	20	100
14x100/35 SW21	9640071811	9640071813	•	100	14	75	35	28	21	10	50
14x130/15/65 SW21	9640071826	9640071828	•	130	14	125 / 75	15/65	28	21	10	50
14x150/35/85 SW21	9640071839	9640071841	•	150	14	125 / 75	35/85	28	21	10	50
14x80/15 SW24	9640071791	-	•	80	14	75	15	29,5	24	10	50
14x110/45 SW24	9640071817	-	•	110	14	75	45	29,5	24	10	50
14x130/15/65 SW24	9640071827	-	•	130	14	125 / 75	15/65	29,5	24	10	50

Visit sormat.com for more info on technical, performance and design data, availability and packaging.
Visit sormat.com for European Technical Assessment ETA-20/0446.

! PERFECT FOR SUPPORT BEAM INSTALLATIONS

S-CSA HEX+, Zinc plated / Multi Layer

PERFORMANCE DATA

Type	ø	Hole in fixture	Nominal setting depth	Min. base material thickness	Width across flats	Max. in-stallation torque	Recommended loads, kN tension / shear Non-cracked concrete C20/25		Recommended loads, kN tension / shear Cracked concrete C20/25	
	d_0 mm	d_f mm	h_{nom} mm	h_{min} mm	SW mm	T_{inst} Nm				
8x55/5	8	10,8-12	50	100	13	45	5,7	10,9	3,1	10,9
8x70/5/20	8	10,8-12	65/50	115/100	13	45	8,8/5,7	12,3/10,9	5,7/3,1	12,3/10,9
8x80/15/30	8	10,8-12	65/50	115/100	13	45	8,8/5,7	12,3/10,9	5,7/3,1	12,3/10,9
8x90/25/40	8	10,8-12	65/50	115/100	13	45	8,8/5,7	12,3/10,9	5,7/3,1	12,3/10,9
8x100/35/50	8	10,8-12	65/50	115/100	13	45	8,8/5,7	12,3/10,9	5,7/3,1	12,3/10,9
8x120/55/70	8	10,8-12	65/50	115/100	13	45	8,8/5,7	12,3/10,9	5,7/3,1	12,3/10,9
8x140/75/90	8	10,8-12	65/50	115/100	13	45	8,8/5,7	12,3/10,9	5,7/3,1	12,3/10,9
10x60/5	10	13-14	55	100	15	85	6,5	18,2	3,6	13,6
10x70/5	10	13-14	55	100	15	85	6,5	18,2	3,6	13,6
10x80/25	10	13-14	55	100	15	85	6,5	18,2	3,6	13,6
10x90/5/35	10	13-14	85/55	130/100	15	85	13,1/6,5	20,1/18,2	9,0/3,6	20,1/13,6
10x100/15/45	10	13-14	85/55	130/100	15	85	13,1/6,5	20,1/18,2	9,0/3,6	20,1/13,6
10x120/35/65	10	13-14	85/55	130/100	15	85	13,1/6,5	20,1/18,2	9,0/3,6	20,1/13,6
10x140/55/85	10	13-14	85/55	130/100	15	85	13,1/6,5	20,1/18,2	9,0/3,6	20,1/13,6
10x160/75/105	10	13-14	85/55	130/100	15	85	13,1/6,5	20,1/18,2	9,0/3,6	20,1/13,6
14x75/10 SW21	14	17-18	65	120	21	100	7,1	26,8	4,0	18,7
14x100/35 SW21	14	17-18	65	120	21	100	7,1	26,8	4,0	18,7
14x130/15/65 SW21	14	17-18	115/65	150/120	21	100	20,0/7,1	37,1/26,8	14,3/4,0	37,1/18,7
14x150/35/85 SW21	14	17-18	115/65	150/120	21	100	20,0/7,1	37,1/26,8	14,3/4,0	37,1/18,7
14x80/15 SW24	14	17-18	65	120	24	100	7,1	26,8	4,0	18,7
14x110/45 SW24	14	17-18	65	120	24	100	7,1	26,8	4,0	18,7
14x130/15/65 SW24	14	17-18	115/65	150/120	24	100	20,0/7,1	37,1/26,8	14,3/4,0	37,1/18,7

Load values include the resistances' partial safety factors as per approvals and a partial safety factor on the action of $\gamma_F = 1.4$. Load values apply for a rebar spacing $s \geq 15$ cm or alternatively for a rebar spacing $s \geq 10$ cm in combination with a rebar diameter of $ds \leq 10$ mm. Concrete is considered non-cracked when the value of tension within the concrete is $\sigma_L + \sigma_R \leq 0$. In the absence of detailed verification $\sigma_R = 3$ N/mm² can be assumed (σ_L equals the tension within the concrete as a result of external loads, forces on anchor included; σ_R equals the tension coming from shrinkage or creep of the concrete, as well as displacements of supports or temperature variations). Shear load values apply for an anchor without influence of a concrete edge. For shear loads close to an edge ($c \leq 10 \times h_{ef}$), concrete edge failure has to be checked as per ETAG, Annex C, Design Method A. Gå till sormat.com för mer information om tekniska data, tillgänglighet och förpackningar.

S-CSA HEX, S-CSA HEX ML, S-CSA CS, S-CSA CS ML, S-CSA I, S-CSA P

! • APPROVED FOR HOLLOW CORE SLABS • CONCRETE MIN. THICKNESS ONLY 80 MM

S-CSA HEX

S-CSA CS

S-CSA I

S-CSA P

Wide range of ETA-approved high-performance concrete screws

VERSIONS

- **S-CSA HEX**, Steel, Zinc plated (ZN) or Multi Layer (ML)
- **S-CSA CS**, Steel, Zinc plated (ZN) tai Multi Layer (ML)
- **S-CSA I**, Steel, Zinc plated (ZN)
- **S-CSA P**, Steel, Zinc plated (ZN)

BASE MATERIALS

- **Approved for:**
  Cracked concrete, Non-cracked concrete, Hollow-core slab
- **Also suitable for:**
  Solid clay brick
  Solid sand-lime brick

APPROVALS

ETA OPTION 1

ETA PART 6

PRODUCT DESCRIPTION

- Self-tapping, approved screw anchors for push-through installations.
- Requires a small drill hole diameter. No prescribed tightening torque.
- No expansion forces allowing for small edge distances and spacings.
- Fully removable.
- ZP for dry indoor use.
- ML corrosion protection coating for outdoor use in not safety relevant applications.

APPLICATIONS

- Facade scaffoldings
- Temporary fixings
- Seatings
- Shelves
- Cable racks
- Handrails
- Battens

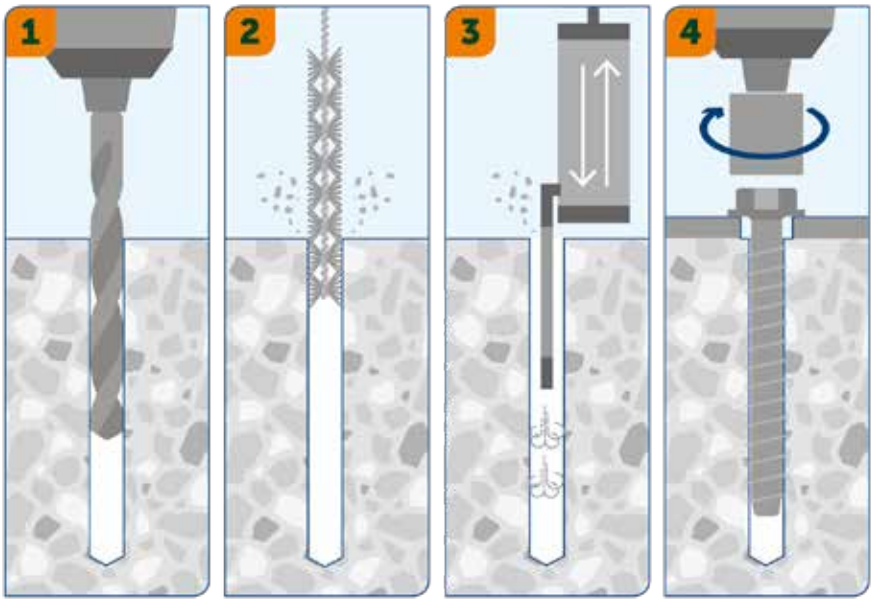

INSTALLATION

1. Drill a hole according to the product data.
2.-3. Clean the hole using a metal brush and a blow-out pump.
4. Install the screw manually using a wrench or with an impact screwdriver.

S-CSA HEX, Zinc plated / Multi Layer

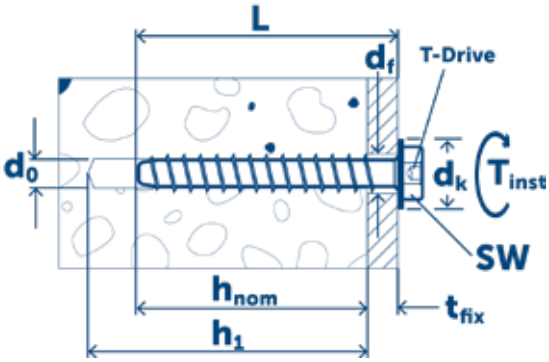

TECHNICAL DATA

Type	Code	Code	Approval	Length	ø	Min. hole depth	Max. fixture thickness	Head Ø	Width across flats		
	Zinc plated	Multi Layer	ETA	L mm	d_0 mm	h_1 mm	t_{fix} mm	d_k mm	SW / T mm		
5x40/5	9640071301	-	-	40	5	45	5	11,5	8	100	500
5x50/5	9640071302	-	-	50	5	55	5	11,5	8	100	500
6x35/1	9640071304	9640071404	•	36	6	40	1	16,5	13 / T30	100	500
6x45/5/10	9640071306	9640071405	•	45	6	50/40	5/10	16,5	13 / T30	100	500
6x50/10/15	9640071308	9640071407	•	50	6	50/40	10/15	16,5	13 / T30	100	500
6x60/5/20	9640071310	9640071409	•	60	6	65/50	5/20	16,5	13 / T30	100	500
6x70/15/30	9640071311	9640071411	•	70	6	65/50	15/30	16,5	13 / T30	100	500
6x80/25/40	9640071314	9640071413	•	80	6	65/50	25/40	16,5	13 / T30	100	500
6x100/45/60	9640071318	9640071417	•	100	6	65/50	45/60	16,5	13 / T30	50	250
6x120/65/80	9640071319	9640071419	•	120	6	65/50	65/80	16,5	13 / T30	50	250
6x140/85/100	9640071321	9640071421	•	140	6	65/50	85/100	16,5	13 / T30	50	250

Visit sormat.com for more info on technical, performance and design data, availability and packaging.

PERFORMANCE DATA S-CSA HEX, Zinc plated / Multi Layer

Type	ø	Hole in fixture	Nominal setting depth	Min. base material thickness	Width across flats	Max. installation torque	Recommended loads, kN tension / shear Non-cracked concrete C20/25		Recommended loads, kN tension / shear Cracked concrete C20/25	
	d_0 mm	d_f mm	h_{nom} mm	h_{min} mm	SW mm	T_{inst} Nm				
5x40/5*	5	7	35	80	8	12	1,1	1,1		
5x50/5*	5	7	45	80	8	12	1,7	1,7		
6x35/1	6	9	35	80	13	14	**	**	**	**
6x45/5/10	6	9	40/35	100/80	13	14	1,4/**	3,1/**	1,4/**	3,1/**
6x50/10/15	6	9	40/35	100/80	13	14	1,4/**	3,1/**	1,4/**	3,1/**
6x60/5/20	6	9	55/40	100	13	14	4,5/1,4	5,6/ 3,1	2,1/1,4	4,5/3,1
6x70/15/30	6	9	55/40	100	13	14	4,5/1,4	5,6/ 3,1	2,1/1,4	4,5/3,1
6x80/25/40	6	9	55/40	100	13	14	4,5/1,4	5,6/ 3,1	2,1/1,4	4,5/3,1
6x100/45/60	6	9	55/40	100	13	14	4,5/1,4	5,6/ 3,1	2,1/1,4	4,5/3,1
6x120/65/80	6	9	55/40	100	13	14	4,5/1,4	5,6/ 3,1	2,1/1,4	4,5/3,1
6x140/85/100	6	9	55/40	100	13	14	4,5/1,4	5,6/ 3,1	2,1/1,4	4,5/3,1

* Not part of ETA approvals. Values are manufacturer's recommendation.The highest recommended loads (kN) for a single anchor. ** Pending
Visit sormat.com for European Technical Assessment ETA-16/0945 and ETA-17/1009.

Load values include the resistances' partial safety factors as per approvals and a partial safety factor on the action of $\gamma_F = 1.4$. Load values apply for a rebar spacing s ≥ 15 cm or alternatively for a rebar spacing s ≥ 10 cm in combination with a rebar diameter of ds ≤ 10 mm. Concrete is considered non-cracked when the value of tension within the concrete is $\sigma_L + \sigma_R \leq 0$. In the absence of detailed verification $\sigma_R = 3$ N/mm² can be assumed (σ_L equals the tension within the concrete as a result of external loads, forces on anchor included; σ_R equals the tension coming from shrinkage or creep of the concrete, as well as displacements of supports or temperature variations). Shear load values apply for an anchor without influence of a concrete edge. For shear loads close to an edge (c ≤ 10 x h_{ef}), concrete edge failure has to be checked as per ETAG, Annex C, Design Method A. Gå till sormat.com för mer information om tekniska data, tillgänglighet och förpackningar.

S-CSA CS, Zinc plated / Multi Layer

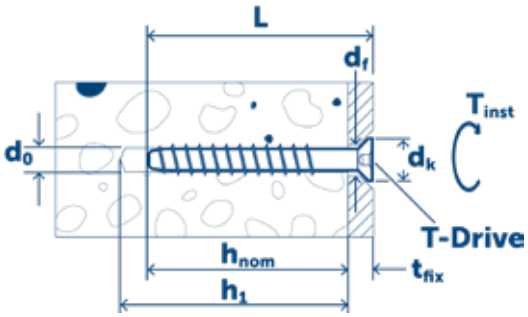

TECHNICAL DATA

Type	Code	Code	Approval	Length	ø	Min. hole depth	Max. fixture thickness	Head Ø	Drive		
	Zinc plated	Multi Layer	ETA	L mm	d_0 mm	h_1 mm	t_{fix} mm	d_k mm	D_2		
5x50/5	9640071601	-	-	50	5	55	5	9,8	T25	100	500
5x75/30	9640071602	-	-	75	5	55	30	9,8	T25	100	500
5x100/55	9640071603	-	-	100	5	55	55	9,8	T25	100	500
6x45/5/10	9640071605	9640071655	•	45	6	50/40	5/10	14	T30	100	500
6x50/10/15	9640071607	9640071657	•	50	6	50/40	10/15	14	T30	100	500
6x60/5/20	9640071609	9640071659	•	60	6	65/50	5/20	14	T30	100	500
6x80/25/40	9640071613	9640071663	•	80	6	65/50	25/40	14	T30	100	500
6x100/45/60	9640071617	9640071667	•	100	6	65/50	45/60	14	T30	50	250
6x120/65/80	9640071619	9640071669	•	120	6	65/50	65/80	14	T30	50	250

Visit sormat.com for more info on technical, performance and design data, availability and packaging.

PERFORMANCE DATA

S-CSA CS, Zinc plated / Multi Layer

Type	ø	Hole in fixture	Nominal setting depth	Min. base material thickness	Max. instal-lation torque	Recommended loads, kN tension / shear Non-cracked concrete C20/25		Recommended loads, kN tension / shear Cracked concrete C20/25	
	d_0 mm	d_f mm	h_{nom} mm	h_{min} mm	T_{inst} Nm				
5x50/5*	5	7	45	80	12	1,7	1,7		
5x75/30*	5	7	45	80	12	1,7	1,7		
5x100/55*	5	7	45	80	12	1,7	1,7		
6x45/5/10	6	9	40/35	100/80	14	1,4/**	3,1/**	1,4/**	3,1/**
6x50/10/15	6	9	40/35	100/80	14	1,4/**	3,1/**	1,4/**	3,1/**
6x60/5/20	6	9	55/40	100	14	4,5/1,4	5,6/3,1	2,1/1,4	4,5/3,1
6x80/25/40	6	9	55/40	100	14	4,5/1,4	5,6/3,1	2,1/1,4	4,5/3,1
6x100/45/60	6	9	55/40	100	14	4,5/1,4	5,6/3,1	2,1/1,4	4,5/3,1
6x120/65/80	6	9	55/40	100	14	4,5/1,4	5,6/3,1	2,1/1,4	4,5/3,1

* Not part of ETA approvals. Values are manufacturer's recommendation.The highest recommended loads (kN) for a single anchor. ** Pending
Visit sormat.com for European Technical Assessment ETA-16/0945 and ETA-17/1009.

Load values include the resistances' partial safety factors as per approvals and a partial safety factor on the action of $\gamma_F = 1.4$. Load values apply for a rebar spacing s ≥ 15 cm or alternatively for a rebar spacing s ≥ 10 cm in combination with a rebar diameter of ds ≤ 10 mm. Concrete is considered non-cracked when the value of tension within the concrete is $\sigma_L + \sigma_R \leq 0$. In the absence of detailed verification $\sigma_R = 3$ N/mm² can be assumed (σ_L equals the tension within the concrete as a result of external loads, forces on anchor included; σ_R equals the tension coming from shrinkage or creep of the concrete, as well as displacements of supports or temperature variations). Shear load values apply for an anchor without influence of a concrete edge. For shear loads close to an edge (c ≤ 10 x h_{ef}), concrete edge failure has to be checked as per ETAG, Annex C, Design Method A. Gå till sormat.com för mer information om tekniska data, tillgänglighet och förpackningar.

S-CSA I, Zinc plated

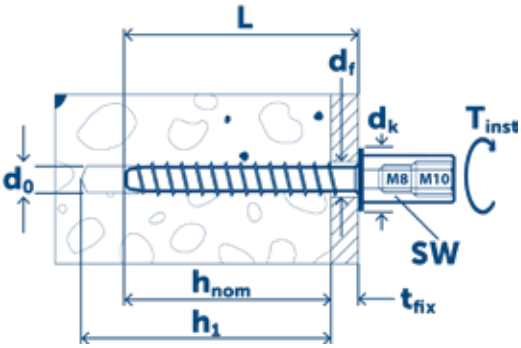

TECHNICAL DATA

Type	Code	Approval	Length	ø	Min. hole depth	Head Ø	Width across flats		
		ETA	L mm	d_0 mm	h_1 mm	d_k mm	SW mm		
6x35 M8/M10x30	9640071513	•	36	6	40	14	13	50	250
6x45 M8/M10x30	9640071514	•	45	6	50	14	13	50	250
6x60 M8/M10x30	9640071519	•	60	6	65	14	13	50	250

Visit sormat.com for more info on technical, performance and design data, availability and packaging.

PERFORMANCE DATA

S-CSA I, Zinc plated

Type	ø	Hole in fixture ø	Nominal setting depth	Min. base material thickness	Width across flats	Max. installa-tion torque	Recommended loads, kN tension / shear Non-cracked con-creteC20/25		Recommended loads, kN tension / shear Cracked concrete C20/25	
	d_0 mm	d_f mm	h_{nom} mm	h_{min} mm	SW mm	T_{inst} Nm				
6x35 M8/M10x30	6	9	35	80	13	14	**	**	**	**
6x45 M8/M10x30	6	9	40	100	13	14	1,4	3,1	1,4	3,1
6x60 M8/M10x30	6	9	55	100	13	14	4,5	5,6	2,1	4,5

Values are manufacturer's recommendation.The highest recommended loads (kN) for a single anchor. ** Pending
Visit sormat.com for European Technical Assessment ETA-16/0945 and ETA-17/1009.

Load values include the resistances' partial safety factors as per approvals and a partial safety factor on the action of γ_F= 1.4. Load values apply for a rebar spacing s ≥ 15 cm or alternatively for a rebar spacing s ≥ 10 cm in combination with a rebar diameter of ds ≤ 10 mm. Concrete is considered non-cracked when the value of tension within the concrete is $\sigma_L + \sigma_R \leq 0$. In the absence of detailed verification σ_R = 3 N/mm² can be assumed (σ_L equals the tension within the concrete as a result of external loads, forces on anchor included; σ_R equals the tension coming from shrinkage or creep of the concrete, as well as displacements of supports or temperature variations). Shear load values apply for an anchor without influence of a concrete edge. For shear loads close to an edge (c ≤ 10 x h_{ef}), concrete edge failure has to be checked as per ETAG, Annex C, Design Method A. Gå till sormat.com för mer information om tekniska data, tillgänglighet och förpackningar.

S-CSA P, Zinc plated

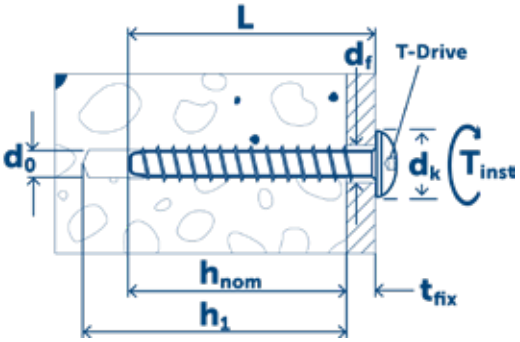

TECHNICAL DATA

Type	Code	Approval	Length	ø	Min. hole depth	Max. fixture thickness	Head Ø	Head height	Drive		
		ETA	L mm	d_0 mm	h_1 mm	t_{fix} mm	d_k mm	k mm	D_2		
6x35/1 (L)	9640071543	•	36	6	40	1	14,5	3,5	T30	100	500
6x45/5/10	9640071544	•	45	6	50/40	5/10	14,5	5	T30	50	250
6x45/5/10 (L)	9640071545	•	45	6	50/40	5/10	14,5	3,5	T30	100	500
6x60/5/20	9640071549	•	60	6	65/50	5/20	14,5	5	T30	50	250

Visit sormat.com for more info on technical, performance and design data, availability and packaging.

PERFORMANCE DATA

S-CSA P, Zinc plated

Type	ø	Hole in fixture ø	Nominal setting depth	Max. installation torque	Recommended loads, kN tension / shear Non-cracked concreteC20/25		Recommended loads, kN tension / shear Cracked concrete C20/25	
	d_0 mm	d_f mm	h_{nom} mm	T_{inst} Nm				
6x35/1 (L)	6	9	35	14	**	**	**	**
6x45/5/10	6	9	40/35	14	1,4/**	3,1/**	1,4/**	3,1/**
6x45/5/10 (L)	6	9	40/35	14	1,4/**	3,1/**	1,4/**	3,1/**
6x60/5/20	6	9	55/40	14	4,5/1,4	5,6/3,1	2,1/1,4	4,5/3,1

Values are manufacturer's recommendation.The highest recommended loads (kN) for a single anchor. ** Pending
Visit sormat.com for European Technical Assessment ETA-16/0945 and ETA-17/1009.

Load values include the resistances' partial safety factors as per approvals and a partial safety factor on the action of γ_F= 1.4. Load values apply for a rebar spacing s ≥ 15 cm or alternatively for a rebar spacing s ≥ 10 cm in combination with a rebar diameter of ds ≤ 10 mm. Concrete is considered non-cracked when the value of tension within the concrete is $\sigma_L + \sigma_R \leq 0$. In the absence of detailed verification σ_R = 3 N/mm² can be assumed (σ_L equals the tension within the concrete as a result of external loads, forces on anchor included; σ_R equals the tension coming from shrinkage or creep of the concrete, as well as displacements of supports or temperature variations). Shear load values apply for an anchor without influence of a concrete edge. For shear loads close to an edge (c ≤ 10 x h_{ef}), concrete edge failure has to be checked as per ETAG, Annex C, Design Method A. Gå till sormat.com för mer information om tekniska data, tillgänglighet och förpackningar.

SORMAT

CONCRETE SCREWS

S-CSA+ HEX

	Size	t_{fix}	Zinc plated	Multi Layer	ETA
8	8x55	5	9640071700	9640071701	•
	8x70	5/20	9640071709	9640071710	•
	8x80	15/30	9640071715	9640071716	•
	8x90	25/40	9640071721	9640071722	•
	8x100	35/50	9640071724	9640071725	•
	8x120	55/70	9640071730	9640071731	•
	8x140	75/90	9640071736	9640071737	•
10	10x60	5	9640071744	9640071745	•
	10x70	15	9640071750	9640071751	•
	10x80	25	9640071756	9640071757	•
	10x90	5/35	9640071762	9640071763	•
	10x100	15/45	9640071765	9640071766	•
	10x120	35/65	9640071771	9640071772	•
	10x140	55/85	9640071777	9640071778	•
	10x160	75/105	9640071783	9640071784	•
14	14x75 SW21	10	9640071785	9640071787	•
	14x100 SW21	35	9640071811	9640071813	•
	14x130 SW21	15/65	9640071826	9640071828	•
	14x150 SW21	35/85	9640071839	9640071841	•
	14x80 SW24	15	9640071791	-	•
	14x110 SW24	45	9640071817	-	•
	14x130 SW24	15/65	9640071827	-	•

S-CSA HEX

	Size	t_{fix}	Zinc plated	Multi Layer	ETA
5	5x40	5	9640071301	-	-
	5x50	5	9640071302	-	-
6	6x35 SW13	1	9640071304	9640071404	• *
	6x45 SW13	5/10	9640071306	9640071405	•
	6x50 SW13	10/15	9640071308	9640071407	•
	6x60 SW13	5/20	9640071310	9640071409	• •
	6x70 SW13	15/30	9640071311	9640071411	• •
	6x80 SW13	25/40	9640071314	9640071413	• •
	6x100 SW13	45/60	9640071318	9640071417	• •
	6x120 SW13	65/80	9640071319	9640071419	• •
	6x140 SW13	85/100	9640071321	9640071421	• •

S-CSA CS

	Size	t_{fix}	Zinc plated	Multi Layer	ETA
5	5x50	5	9640071601	-	-
	5x75	30	9640071602	-	-
	5x100	55	9640071603	-	-
6	6x45	5/10	9640071605	9640071655	•
	6x50	10/15	9640071607	9640071657	•
	6x60	5/20	9640071609	9640071659	• •
	6x80	25/40	9640071613	9640071663	• •
	6x100	45/60	9640071617	9640071667	• •
	6x120	65/80	9640071619	9640071669	• •

S-CSA P

	Size	t_{fix}	Zinc	ETA
6	6x35 (L)	1	9640071543	• *
	6x45	5/10	9640071544	•
	6x45 (L)	5/10	9640071545	•
	6x60	5/20	9640071549	• •

S-CSA I

	Size	Zinc	ETA
6	6x35 M8/M10x30	9640071513	• *
	6x45 M8/M10x30	9640071514	•
	6x60 M8/M10x30	9640071519	• •

CG S-CSA+ 14 reusability checking gauge

• Option 1 • Part 6 * coming

SORMAT
Harjutie 5, 21290 Rusko, Finland

2104128